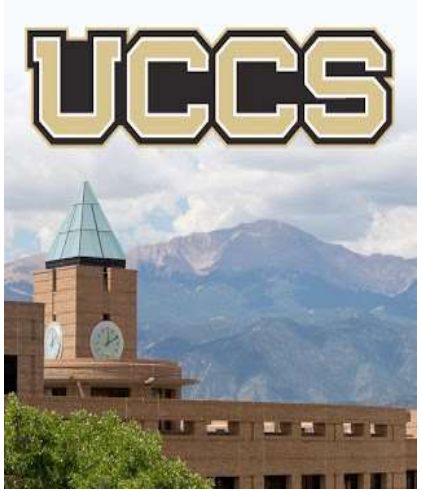

Unit 01.02.01
CS 5220:
COMPUTER COMMUNICATIONS

Layered Architecture and OSI Model

XIAOBO ZHOU, Ph.D.

Professor, Department of Computer Science

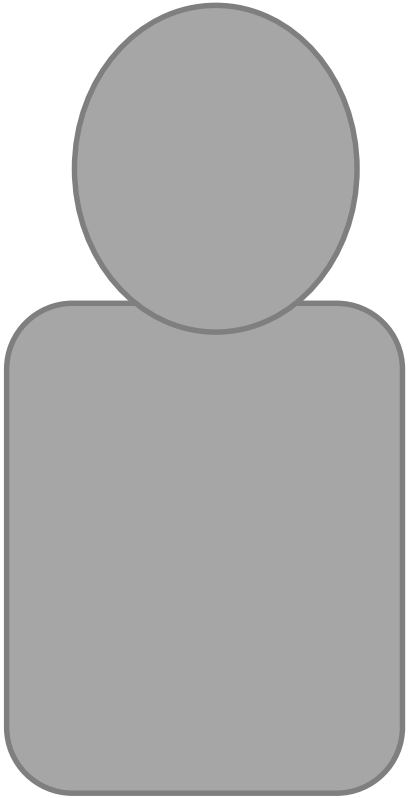

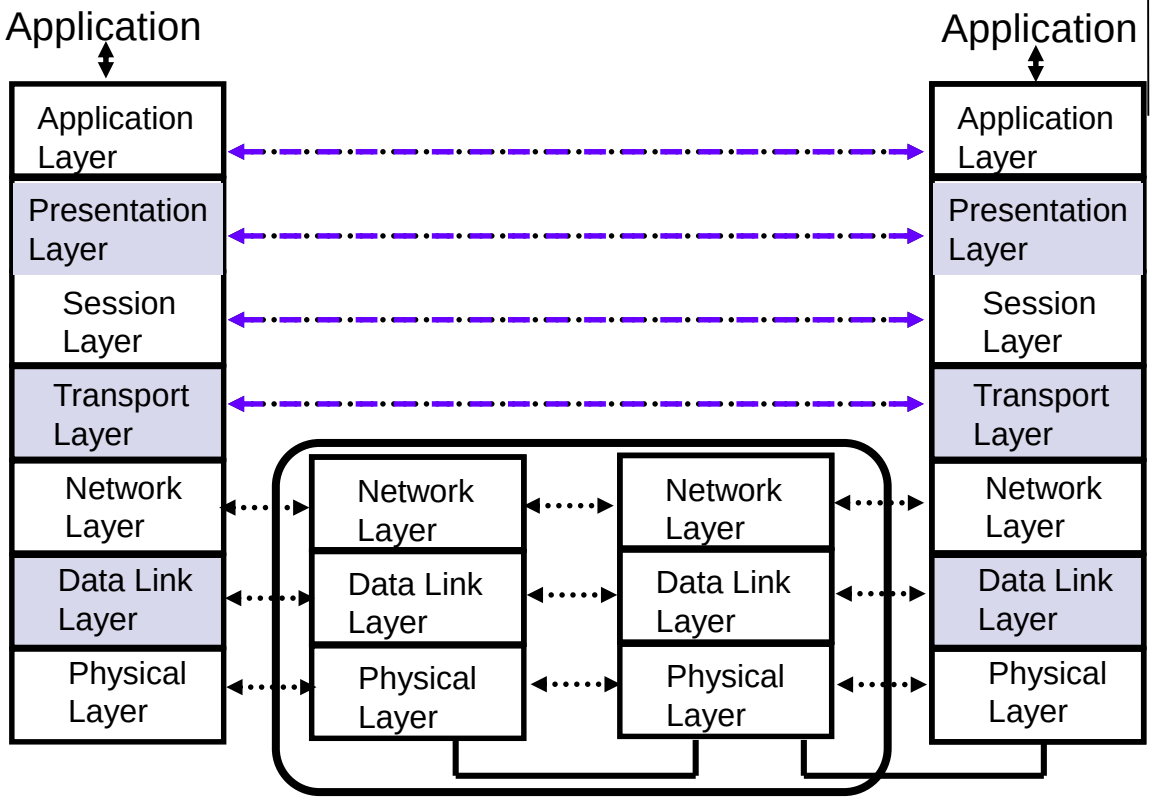
Application
Application
Application Layer
Presentation Layer
Session Layer
Transport Layer
Network Layer
Data Link Layer
Physical Layer
Network Layer
Data Link Layer
Physical Layer
Network Layer
Data Link Layer
Physical Layer
Application Layer
Presentation Layer
Session Layer
Transport Layer
Network Layer
Data Link Layer
Physical Layer

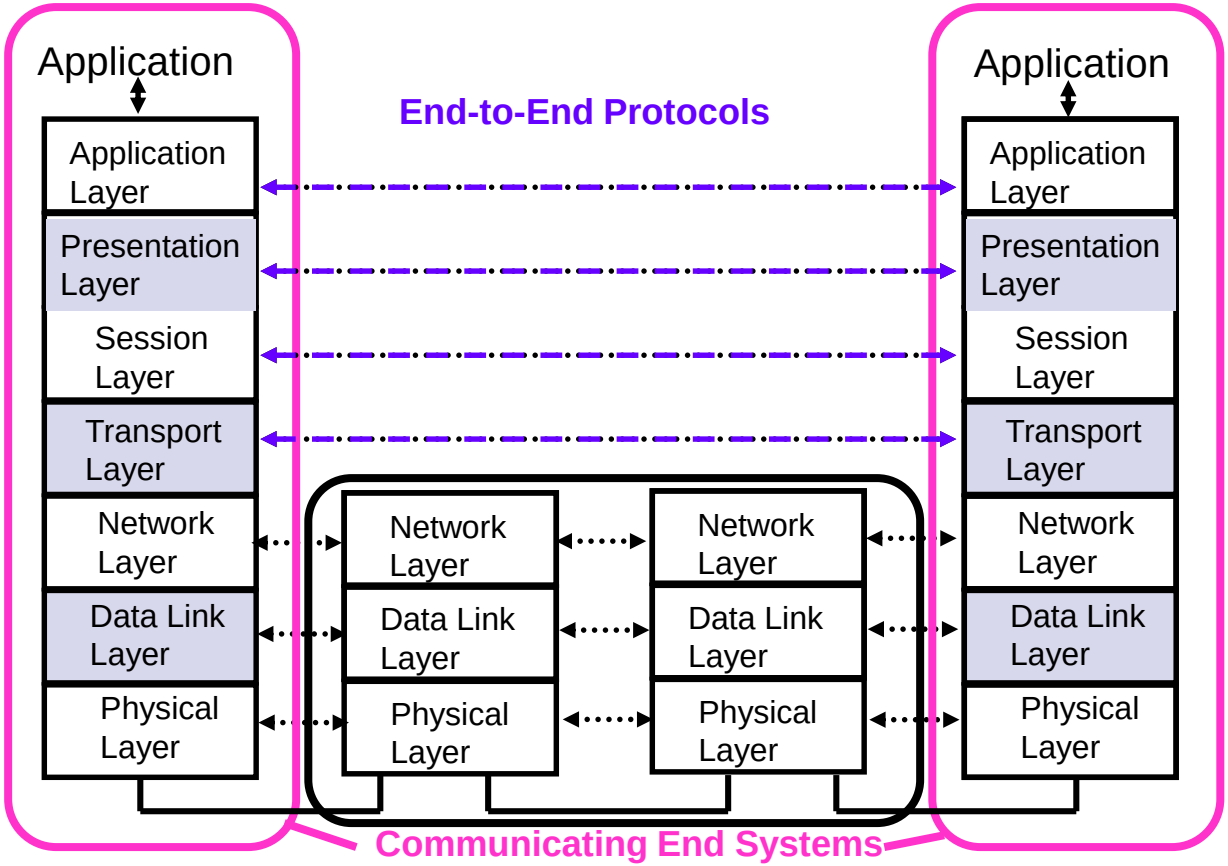

7-Layer OSI Model

7-Layer OSI Model

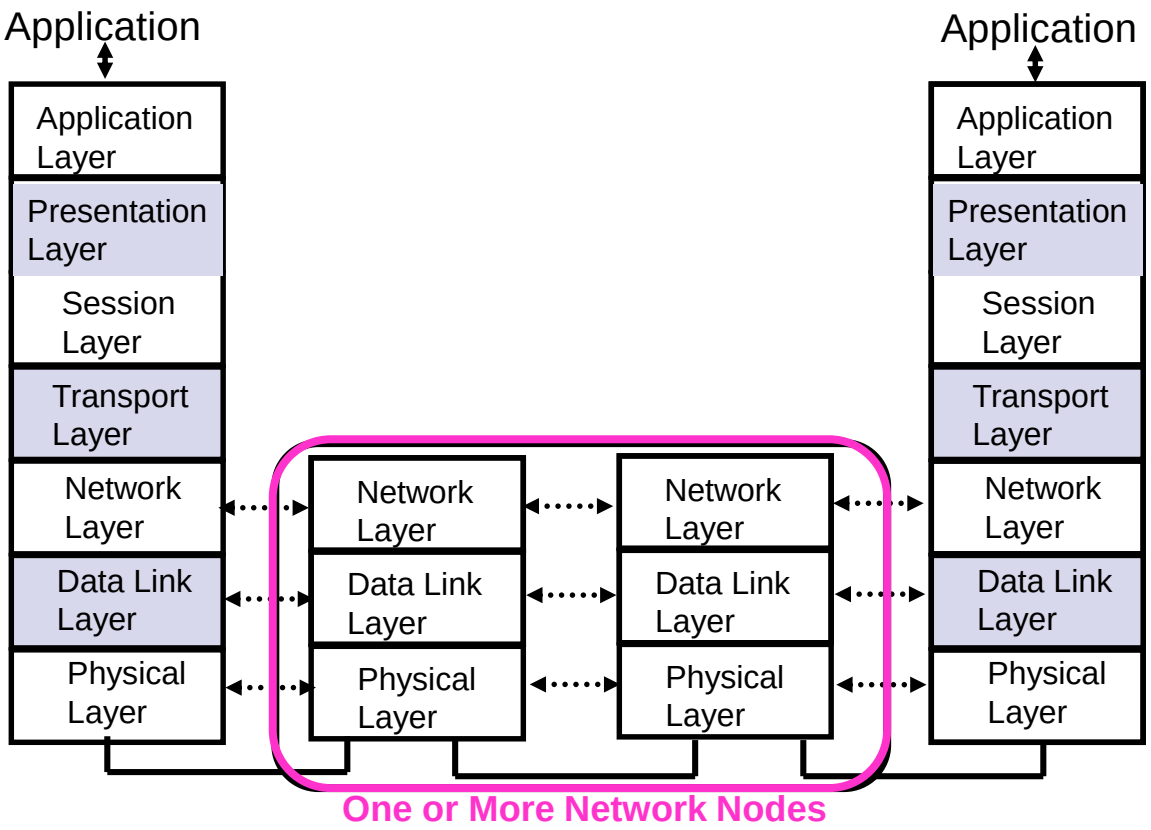

Why Layering Architectures?

- Layering simplifies design, implementation, and testing by partitioning
- Protocol in each layer can be designed separately from those in other layers
- Protocol makes “calls” for services from layer below
- Layering provides flexibility for modifying and evolving protocols and services
- Non-layered architectures are costly, inflexible, and soon obsolete

Physical Layer

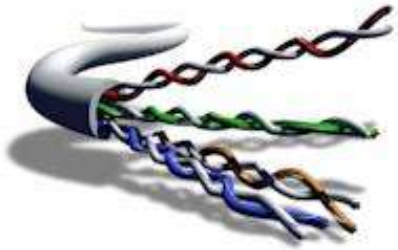

- Transfers bits across a link
- Definition & specification of the physical aspects
  - Mechanical: cable, plugs, pins...
  - Electrical/optical: modulation, signal strength, voltage levels, bit times, …
  - functional/procedural: how to activate, maintain, and deactivate physical links…
- Ethernet, DSL, cable modem, telephone modems…
- Twisted-pair cable, coaxial cable optical fiber, radio, …

Data Link Layer

- Transfers *frames* across *direct* connections
  - Groups bits into frames
  - Detection of bit errors; Retransmission of frames
- Activation, maintenance of data link connections
- Medium access control for local area networks
- *Node-to-node* flow control

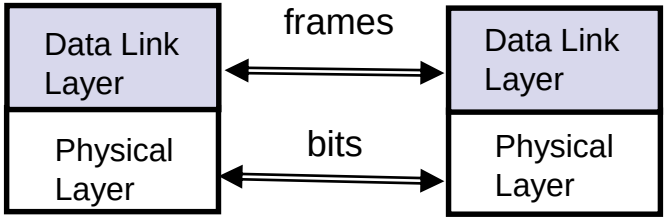

Network Layer

- Transfers *packets* across multiple links and/or multiple networks
  - *Addressing* must scale to large networks
  - Nodes execute *routing* algorithm to determine paths across the network
  - Routing protocol means the procedure used to select routing paths
  - *Forwarding* transfers packet across a node
  - *Congestion control* to deal with traffic surges
  - Most complex layer in the OSI reference model

Internetworking

- Internetworking is part of network layer and provides transfer of packets across multiple and possibly dissimilar networks
- Gateways (routers) direct packets across networks

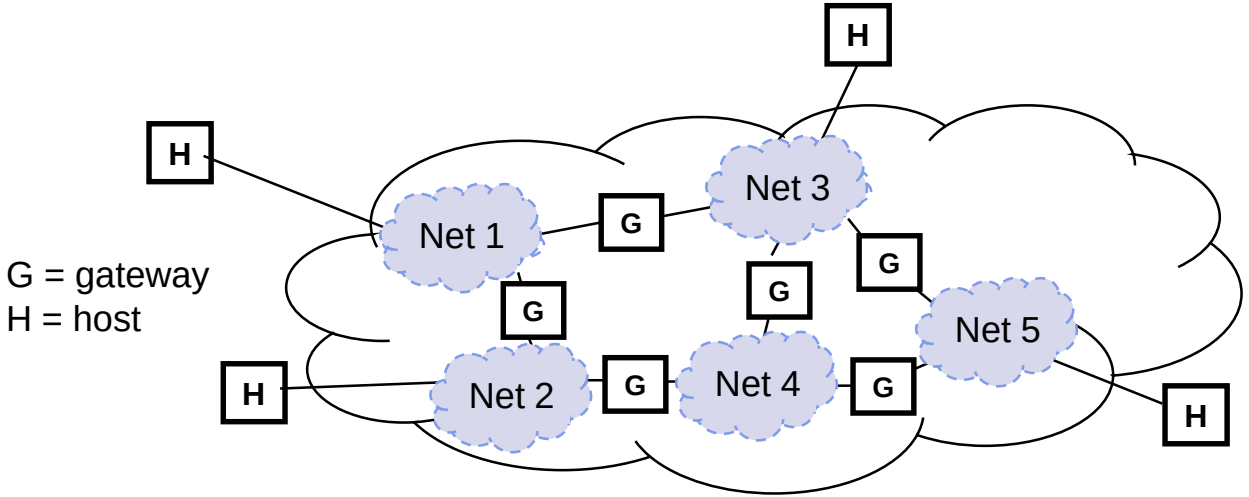

Internetworking - II

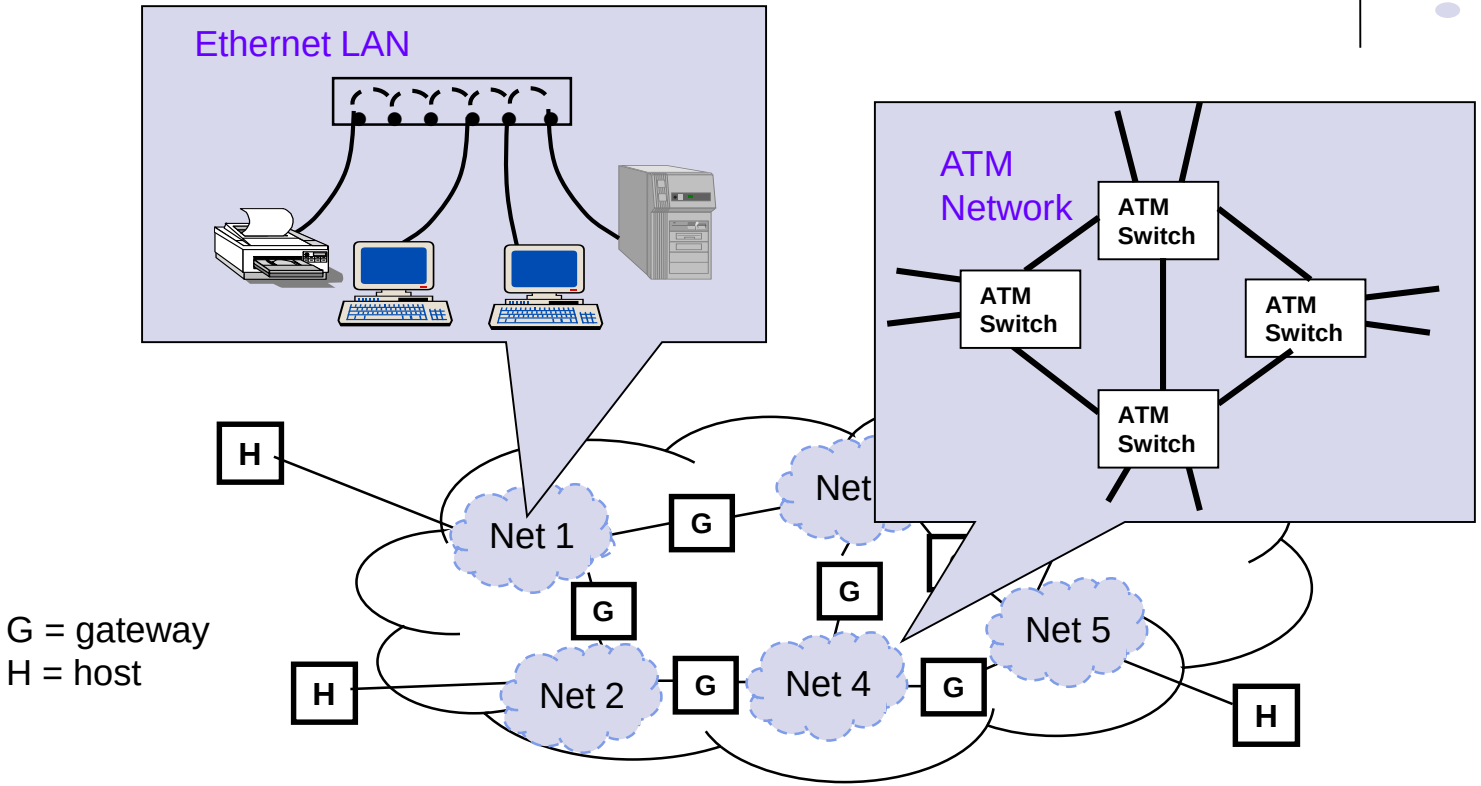

G = gateway
H = host

Transport Layer

- Transfers segments end-to-end from process in a machine to process in another machine
  - *Reliable* stream transfer or quick-and-simple single-block transfer
  - Message segmentation and reassembly
  - Connection setup, maintenance, and release

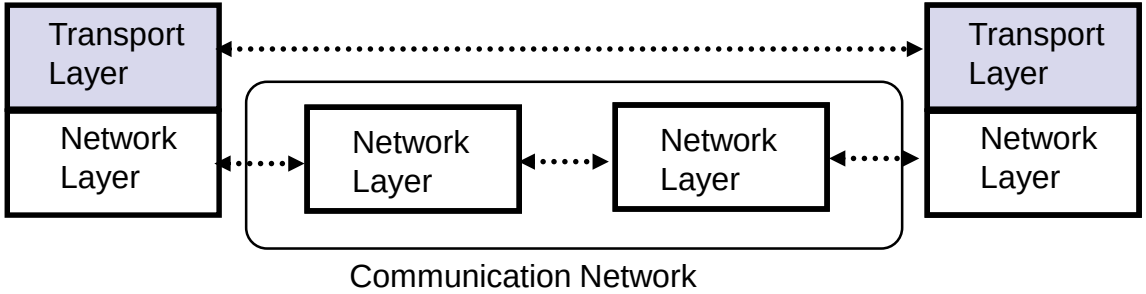

Application & Upper Layers

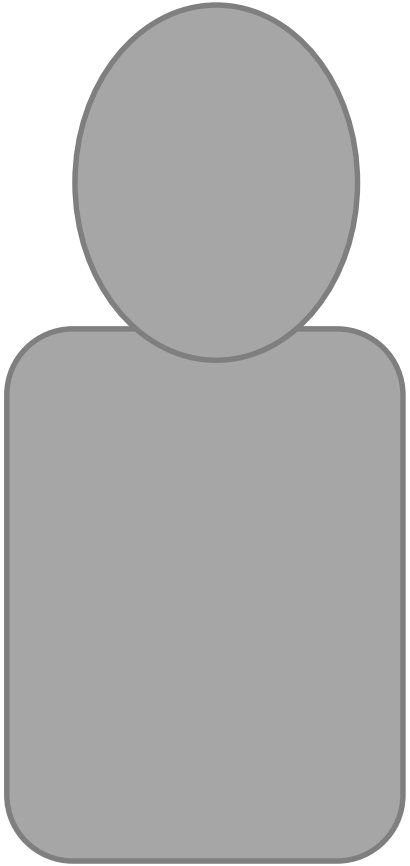

- Application Layer: Provides services that are frequently required by applications: DNS, HTTP web access, file transfer, email…
- ~~Presentation Layer: machine-independent representation of data…~~
- ~~Session Layer: dialog management, recovery from errors, …~~

Incorporated into Application Layer

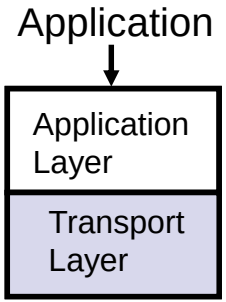

Lesson Summary

- The overall communication process between machines connected across one or more networks is very complex
- ***Layering*** partitions related communication functions into groups that are manageable